LUNENCO – A Business Case Study for Commercial Lunar Energy. E. E. Engeldrum, N. Yugo, N. Davis, and G. Lebar, Space Resources Department Graduate Students, Colorado School of Mines, 6577 S Ammons Ct Littleton, CO. eengeldrum@mines.edu.

Introduction: The Lunar Energy Company (LUNENCO) business concept was born out of the growing interest in lunar exploration, mining, and scientific missions. There are many lunar missions planned for the near future[1] and all of these missions have one thing in common, the need for a reliable power source while operating on the Moon. This power demand grows rapidly as missions become more ambitious and supplying the necessary power will become a limiting factor on many missions.[2] Establishing a lunar power utility with the capability to provide power to multiple missions would provide a mass efficient, and therefore, cost effective solution. The proposed lunar power utility, operated by LUNENCO, will offer power delivered on the lunar surface to its customers. By providing a singular power solution that is capable of satisfying the needs of multiple customers, future missions will be cheaper as companies will no longer require the development, transportation, and deployment of their own individualized power solution. This availability of an affordable and reliable source of power will enable more lunar missions, increasing the customer base. The purpose of the LUNENCO study was to investigate whether a commercial power utility on the Moon is a viable business model, and to evaluate different architectures that could meet the goals of a cost and mass efficient power system that meets projected power demands.

Through the course of the study, the LUNENCO team analyzed three sides of a business: market, technical, and financial. First, the team conducted a market analysis to determine the potential customers for lunar power. The customer list included government agencies as well as private companies that have expressed an interest in future lunar missions. A customer database was developed with details about each including historical funding of space programs, trend in funding, and any available lunar plans with power demand, timelines, and lunar locations. This information is used to create a projected power demand on the Moon over the 20-year operational lifetime of LUNENCO's power system. The plot of future demand, shown in Figure 1, was used to divide LUNENCO's deployment into several phases. This phased approach allows for rapid development to meet the initial, Phase 1, power needs while still continuously developing power technologies and rolling in improvements to the system in each new phase. This phased strategy will allow LUNENCO to move quickly and establish a strong hold on the lunar power market early and to evolve to meet the demands of the future.

Market Review and Opportunity Formation: The identified customers were grouped into three tiers based on their likelihood of realizing their lunar missions and earliest landing of their respective systems on the Moon. LUNENCO's strategy for capturing the customer base is to partner with the early missions, in exchange for favorable long-term power contracts, and establish a presence as a lunar power provider. The targeted first customers of LUNENCO are NASA's Artemis base[3] and the Space Force's cislunar objectives,[4] both of which have near-term (within 5 years) timelines for power demand on the moon, as well as a demonstrated interest in purchasing power as a service and published projected power demands. NASA in particular has multiple near-term lunar missions planned, and the construction and maintenance of the Artemis base will require a consistent power supply. The needs of these first customers were used to develop the requirements for the initial deployment, Phase 1, of LUNENCO's power system. Requirements for later phases were similarly developed and all of these requirements were used to inform the selection of a technical solution.

Technical Solution: To determine a technical solution, the LUNENCO team conducted a trade study of lunar power architecture options, first for the Phase 1 deployment, and then including the later (and higher demand) phases. The success of LUNENCO as a business depends on its timeliness, safety, reliability, and cost of delivered power to the customer and figures of merit with a defined scoring scale were created to reflect that. These figures of merit were weighted to prioritize safety (a necessity to be considered for any human missions), reliability, as well as the capacity to meet an aggressive deployment schedule (while still minimizing development, build, and launch costs). Each possible lunar power architecture was scored and the highest scoring option, a scaled up modular nuclear power solution,[5] was selected. This solution entailed using multiple 50kWe nuclear reactors to meet the Phase 1 power demands. Due to the relatively small size of this reactor, there is a realistic path to qualification within the timeline needed for Phase 1 and the use of multiple units would provide built in redundancy. In later phases, as the power demand leaps into the Megawatt range, there is the potential to switch to a more mass efficient large-scale reactor or continue to use multiple smaller reactors and take advantage of the

savings associated with mass production of identical units. Furthermore, the nuclear power solution also provides an additional revenue stream because of the potential sale of the biproducts of power production, specifically, thermal power. The waste heat from the nuclear reactor that is unable to be converted to electrical power would be very useful to customers for use in mining operations and thermal control. Figure 1 shows a physical system description summarizing the technical solution.

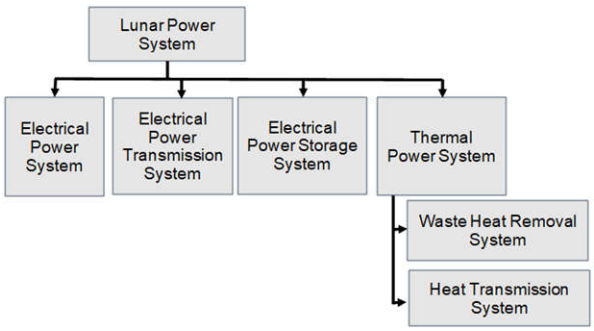

Figure 1. Physical System Description

Financial Analysis: In parallel with the development of the technical solution, a financial analysis was completed to determine the viability of LUNENCO as a business. The market research determined a price point that potential customers would be willing to pay, per Watt delivered on the Moon, and the financial analysis demonstrated the potential profitability of that price point. As shown in Figure 2, the initial phase covers the first seven years of sales with production remaining in the sub 1 MW region. At year 8, a step change appears where commercial mining operations begin and revenue from thermal sales are actualized. At this point, the "waste" heat of the reactor fleet is monetized for sale to, for example, propellant manufacturers. For the purposes of the analysis, it is assumed that only 10% of the total reactor thermal power is capable of being sold. The project base-case, without thermal sales, has an NPV in excess of $700m, and with thermal sales approaches $2b at 15% discount rate, electrical rates from $70 to $100/kWhr and thermal sales of $50/kWhr. The project as envisioned is therefore commercially viable.

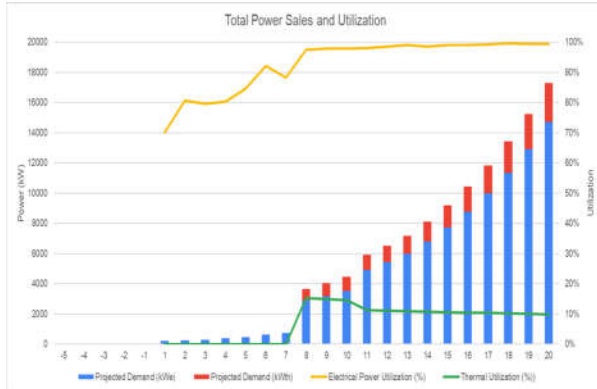

Figure 2. Total Power Sales and Utilization

Conclusions: The results of this study were that a lunar power utility is a financially and technically viable business case. Utilizing customer partnerships, a competitive pricing strategy, and technology development in conjunction with key suppliers, LUNENCO would be positioned to become and remain the dominant power provider on the Moon for many years to come.

References: [1] NASA Headquarters (2020) *NASA,* NP-2020-05-2853-HQ. [2] Kornuta, et al. (2019) *REACH 13,* 100026. [3] NASA Office of Inspector General (2021) *NASA* IG-21-018. [4] Hadley, G. (2021) *Air Force Magazine*, https://www.airforcemag.com/senate-appropriations-proposes-500-million-extra-for-space-force-in-2022/. Accessed April 11, 2022. [5] Gibson, M.A., et al., (2017) *NASA Technical Reports Server*, 20170002010.